Customer code:	NONE	Part number:	M8AFR04-0003	Rev:	D

Changing log

Rev.	ECN#	Description	Changed by	Date
B	NONE	PCB VIEW ORIENTATION UPDATE.	Tao	2022-10-11
C	NONE	UPDATE.	Tao	2022-12-14
D	NONE	CHANGED THE SIZE OF O-RING.	Tao	2023-01-03

NOTE:
1. ELECTRICAL CHARACTERISTICS:
   1.1 VOLTAGE PROOF: 800V DC
   1.2 RATED VOLTAGE: 60V DC
   1.3 RATED CURRENT: 4A MAX.
   1.4 CONTACT RESISTANCE: 3mΩ MAX
   1.5 INSULATION RESISTANCE: 2000MΩ MIN.
2. MECHANICAL CHARACTERISTICS:
   2.1 TEMPERATURE RANGE: -40°C~+100°C
   2.2 MATING CYCLE: 500 TIMES
   2.3 WATERPROOF: IP67
3. ALL MATERIALS AND PROCESS ARE RoHS COMPLIANT.

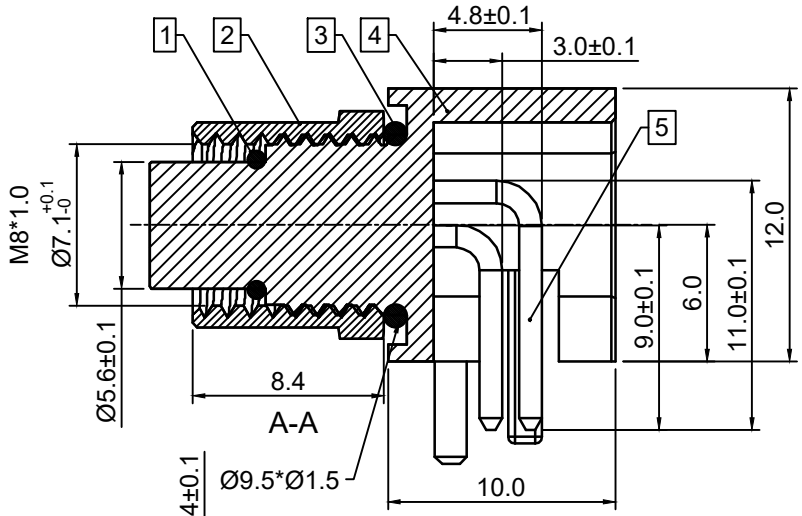

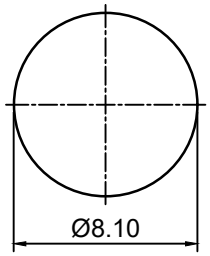

RECOMMENDED PANEL HOLE

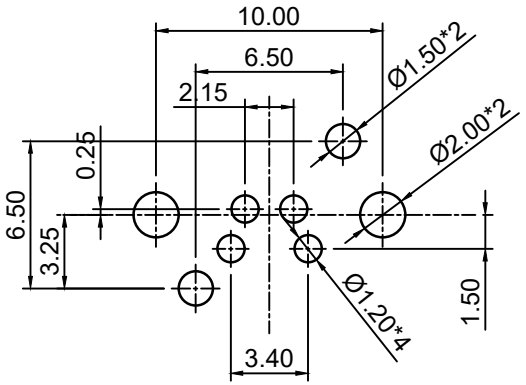

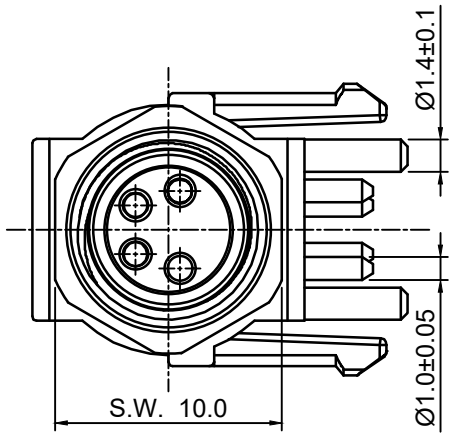

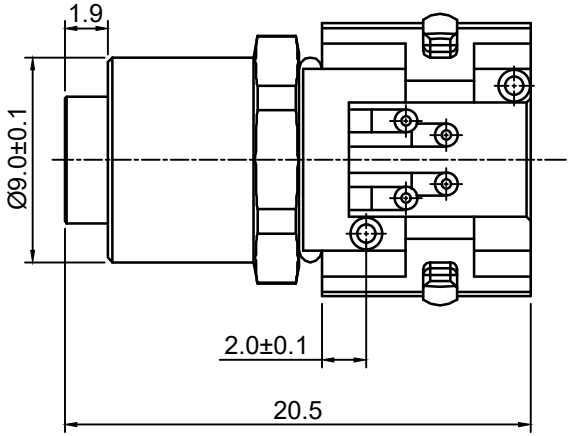

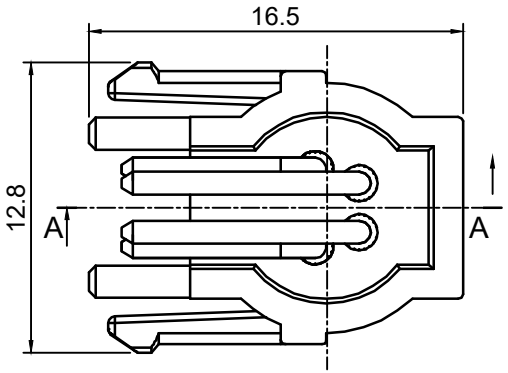

RECOMMENDED PCB MOUNT DIMENSION

ITEM	NAME	MATERIAL	TREATMENT	QTY
5	CONTACT	BERYLLIUM COPPER	GOLD	4EA
4	INSULATOR	NYLON	BLACK	1EA
3	O-RING	SILICONE RUBBER	RED	1EA
2	COUPLING NUT	BRASS	NICKEL	1EA
1	O-RING	SILICONE RUBBER	BLACK	1EA

Bill Of Material

TOLERANCES UNLESS OTHERWISE SPECIFIED		
ONE PLACE DECIMAL	.X	±0.20
TWO PLACE DECIMAL	.XX	±0.10
THREE PLACE DECIMAL	.XXX	±0.02
HOLE DIA. VARIATION	.XX	N/A
ANGULAR DIMENSION		±3°

Signature	
Approved By:	
Checked By:	
Drawn By:	Tao

SHINTO ELECTRONICS CO.,LTD
http://www.shinto-electronics.com

Shinto P/N:	M8AFR04-0003		
Description:	M8 Code A Female Right Angle 4P		
Material:	See BOM	Treatment:	See BOM
Unit: mm	Size: A4	Scale: 3:1	Sheet: 1 of 1

THE INFORMATION CONTAINED HEREIN IS PROPRIETARY TO SHINTO.ANY USE OR DISCLOSURE OF THIS INFORMATION,EXCEPT FOR THE EXCLUSIVE BENEFIT OF SHINTO IS PROHIBITED.